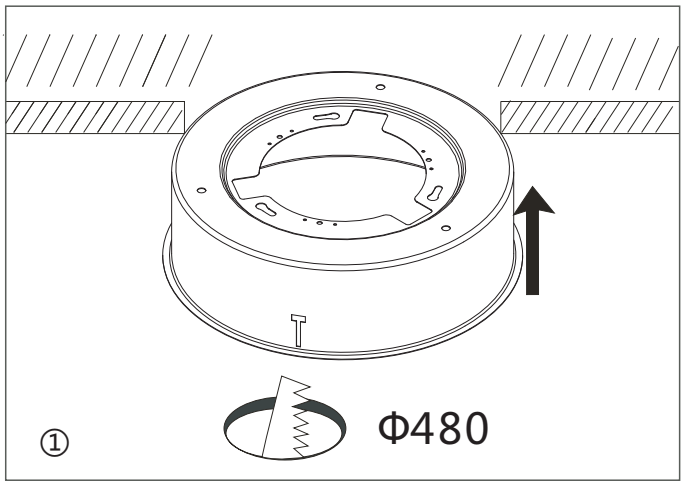
Φ480
①

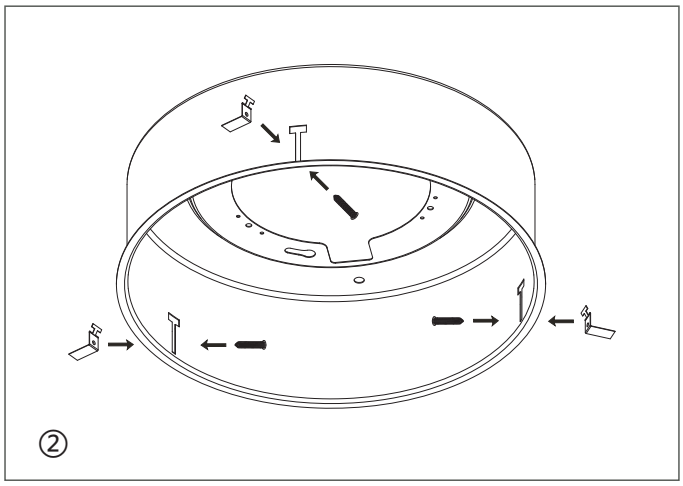
②

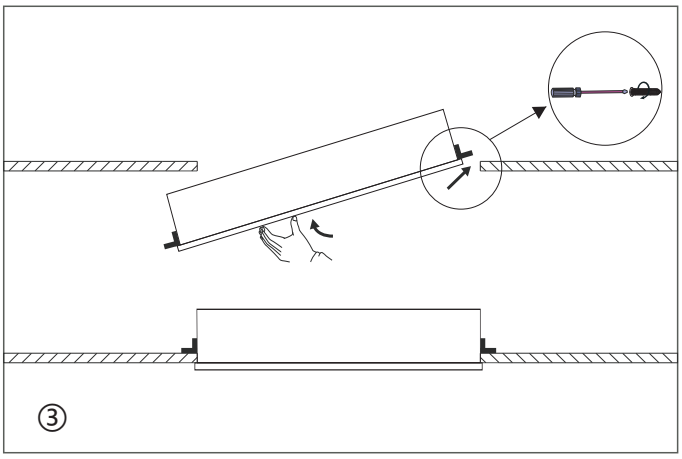
③

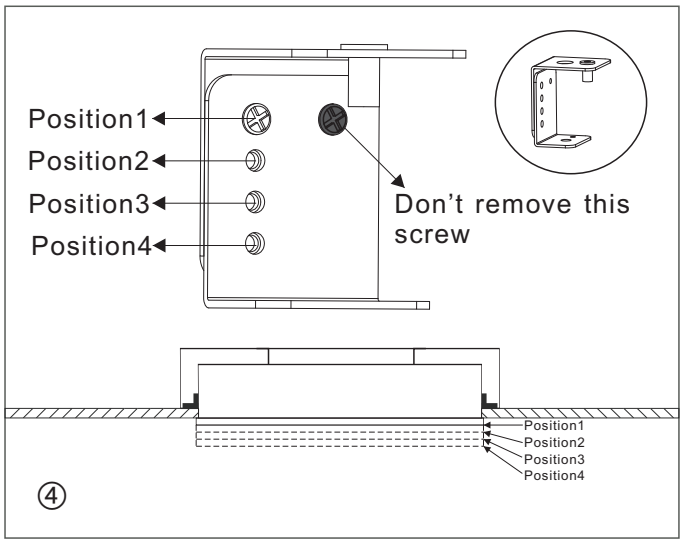
Position1
Position2
Position3
Position4
Don't remove this screw
Position1
Position2
Position3
Position4
④

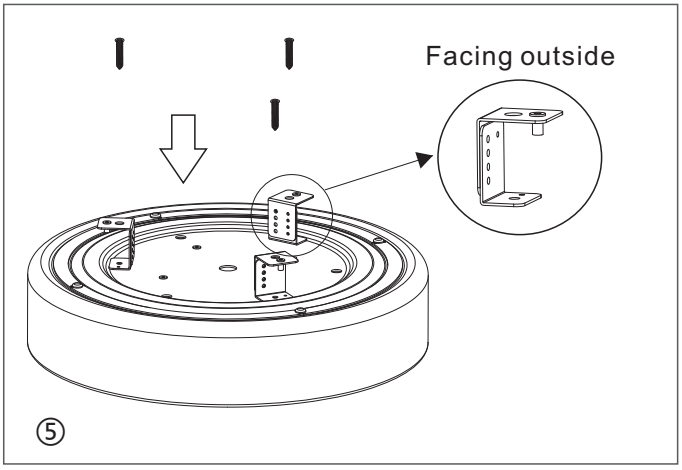
Facing outside
⑤

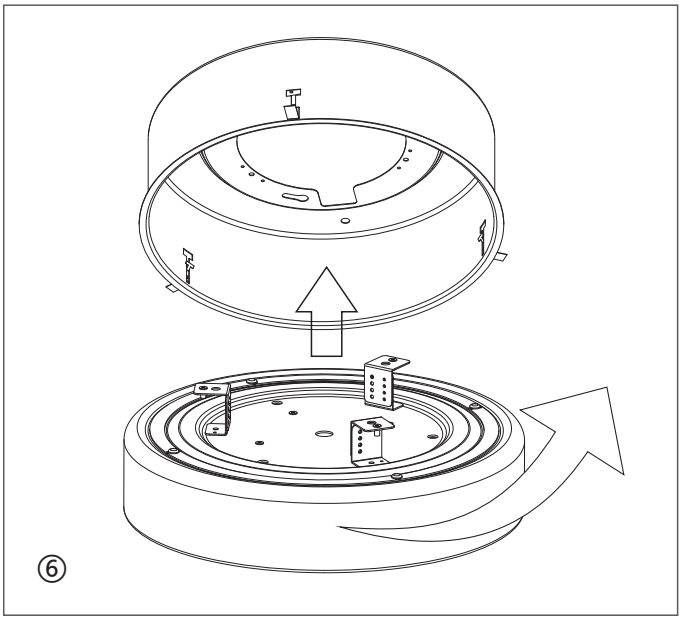
⑥

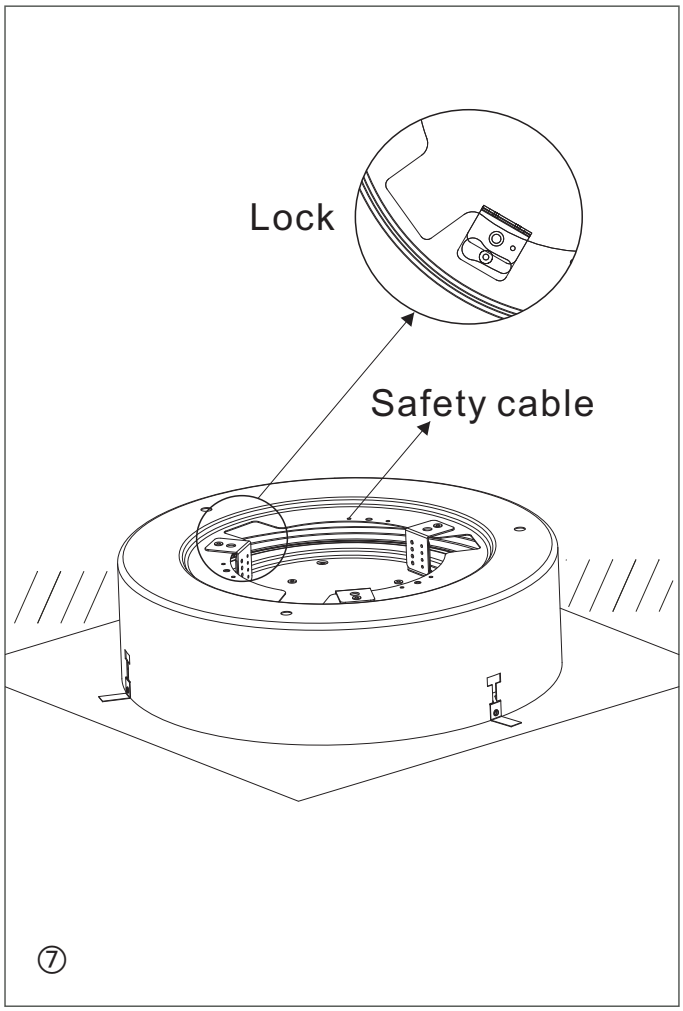
Lock
Safety cable
⑦